MINIPACK

HIGH PEAK

SET UP VIDEO

1.

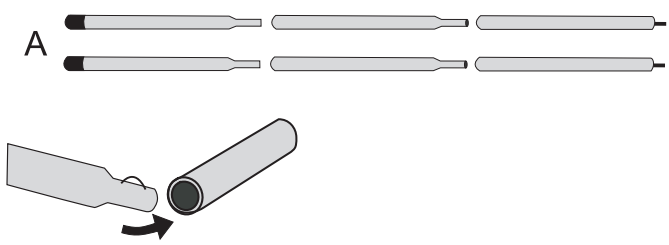

2.

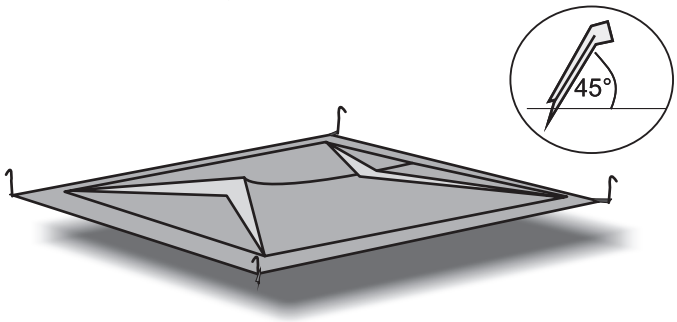

3.

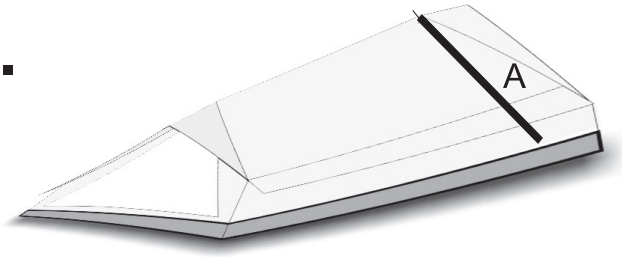

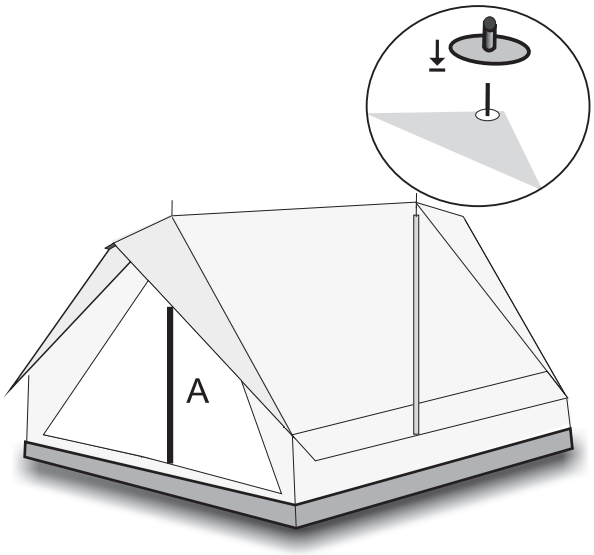
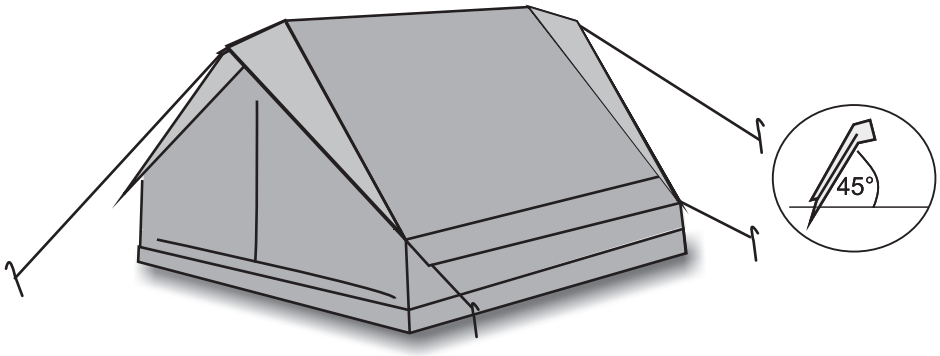
4.